HEAT RECOVERY VENTILATORS
FOR INDOOR POOLS AND SPAS

POOL

HRVs:
AIR 750-P
AIR 1250-P

Installation Manual

AIR-POOL 1026

airflowiaq.com

Pre-Installation Notes

Note

- Due to ongoing research and product development, specifications, ratings, and dimensions are subject to change without notice. Refer to www.airflowiaq.com for the latest product information.

Attention

- Do not apply electrical power to the unit until after the completion of the installation (including installation of low voltage control wiring).
- Ensure the installation and wiring is in accordance with CEC, NEC, and local electrical codes.
- Plug the unit into a standard designated (120 VAC) electrical outlet with ground.
- The use of an extension cord with this unit is not recommended. If the installation requires further wiring, have a licensed electrician make all of the electrical connections. The recommended circuit is a separate 15 A/120 V circuit.

Caution

- Before installation, careful consideration must be given to how this system will operate if connected to any other piece of mechanical equipment, i.e. a forced air furnace or air handler, operating at a higher static. After installation, the compatibility of the two pieces of equipment must be confirmed, by measuring the airflows of the HRV, by using the balancing procedure found in this manual. Never install a ventilator in a situation where its normal operation, lack of operation or partial failure may result in the back drafting or improper functioning of vented combustion equipment
- Unit must be installed level to ensure proper condensate drainage. Due to the broad range of installation and operational conditions, consider the possibility of condensation forming on either the unit or connecting ducting. Objects below the installation may be exposed to condensate.
- Do not install control wiring alongside electrical wire.
- Pool room air/surfaces must have a heating appliance which does not include the pool water as its source. The pool room and water must be continuously operated at its original design as any deviation from this could greatly affect the operation of the unit. The pool unit must be fully commissioned after installation which includes confirming proper operation of the control, normal operation of the unit, and drainage through the pans without unintentional leakage.

Warning

- Disconnect the power from the unit before cleaning or servicing.
- To prevent electrical shock, it is extremely important to confirm the polarity of the power line that is switched by the safety (disconnect) switch. The hot line (black) is the proper line for switching. Use either a voltmeter or test lamp to confirm the absence of a voltage between the disconnect switch and ground (on the cabinet) while the door is open. This procedure must be followed, as dwellings are occasionally wired improperly. Always ensure the proper grounding of the unit.
- Improper installation, adjustment, alteration, service or maintenance can cause property damage, personal injury or loss of life. Installation and service must be performed by a qualified installer or service agency.

Table of Contents

1 Location Notes 3
2 The Duct Work System 4
3 Sample Duct Layout 1 5
4 Sample Duct Layout 2 6
5 Dimensional Drawings 7
6 Stale Air Return and Fresh Air Supply System 8
7 Weatherhoods and Grilles 9
8 Drain Connections 10
9 Electrical Connections 11
10 Modes of Operation for the Pool HRV 12
11 Calculating the Ventilation Rate for the Pool Room 13
12 Table 1 – Evaporation Rates 14
13 Table 2 – Flow Rate Factors 15
14 Make Up Heat 16
15 Defrost Time Adjustment 16
16 Reversing the Supply and Defrost Air Ports 17
17 Function and Controls 18
18 Main Wall Control 19
19 Control and Dehumidistat 21
20 Balancing the Airflows 22
21 Service and Maintenance 24
22 Reverse Installation of the HRV 26
23 Troubleshooting 28
24 Wiring Diagrams (750/AIR 1250-P) 30
25 Warranty 31

Warranty Information

Refer to the last page in this manual for complete Warranty information.

1 LOCATION NOTES

The HRV must be in a heated space where the surrounding air temperature does not fall below 60°F (16°C). The unit must be mounted level (horizontal) to obtain proper drainage of water from the heat exchange element and drip pans. The warranty will be void if these conditions are not met. Typically, the HRV is positioned close to an outside wall or the roof to simplify the connections and keep the length of insulated ducting required for the fresh air intake to a minimum.

A minimum clearance of 30 inches (76 cm) in front of the HRV is recommended to service the heat exchanger cores and the filters. The HRV may be mounted on an equipment platform providing the drain hoses are clear and there is sufficient space to open the doors for servicing.

Saddle Installation

(1) Threaded rod (not supplied)
(2) Vibration isolators (not supplied)

Hang unit with suspended rods and "U" channel members

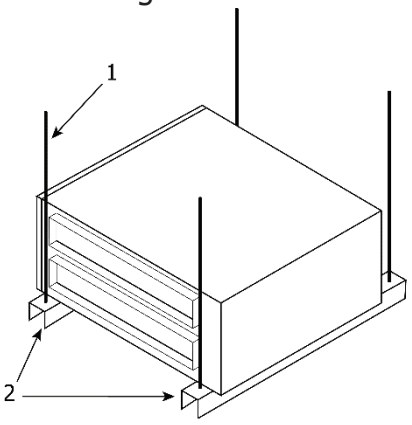

Curb Mounted Installation

(3) Curb—Wood or Metal (not supplied)
(4) Vibration isolators (not supplied)

Mount unit on wooden or metal curb assembly. Unit must be raised an adequate height for installation and slope of drain lines. May be anchored to floor, leaving space for drain connections.

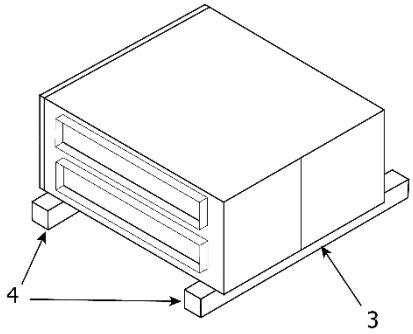

Suspended Installation

(5) PVC support straps (not supplied)

Suspend the unit using polyester reinforced PVC support straps.

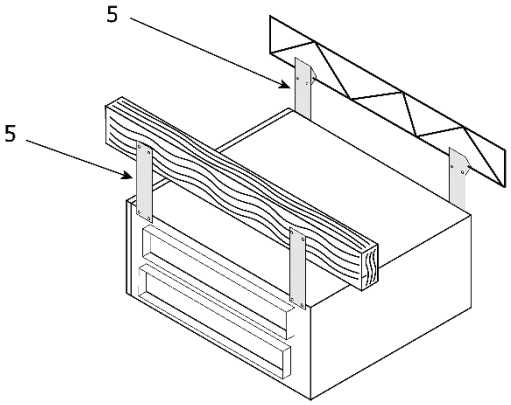

Warning

- Flexible duct connectors should be installed between the ERV and the galvanized ductwork.

2 THE DUCT WORK SYSTEM

A properly designed ducting system will allow the HRV to operate at its maximum efficiency. (Air flow will be restricted by undersized ducting, use of too many elbows, tees, bends, etc.). Always try to keep duct runs as short and straight as possible.

Proper duct design & duct sizing will:

- Minimize air flow requirements.
- Ensure a comfortable environment by using reheat if required.
- Optimize humidity control, including eliminating condensation on windows by blanketing the windows with airflow.

Refer to Sample Duct Layout 1 and 2 for typical duct system designs.

All joints must be airtight, sealed and impervious to moisture. See Dimensional Drawings for each unit for exact duct sizes and location.

To minimize pressure drop and noise, galvanized metal ducts, properly sized, are recommended. Keep ducting as short as possible and use a minimum of elbows and tees. Connecting sections and shorter runs may be flexible ducting one size larger than the metal equivalent. Use flexible duct connectors at the HRV to avoid noise transmission.

All duct joints must be secured with screws, rivets or duct sealant and sealed with aluminum duct tape to prevent leakage.

Attention

- Fully insulated ducting with an integral vapour barrier must be used on all runs passing through unheated areas in order to avoid condensation problems and energy losses from the air systems.

3 SAMPLE DUCT LAYOUT 1

System Installation:
It is necessary to design and size the duct distribution system for both the supply and the exhaust air streams.

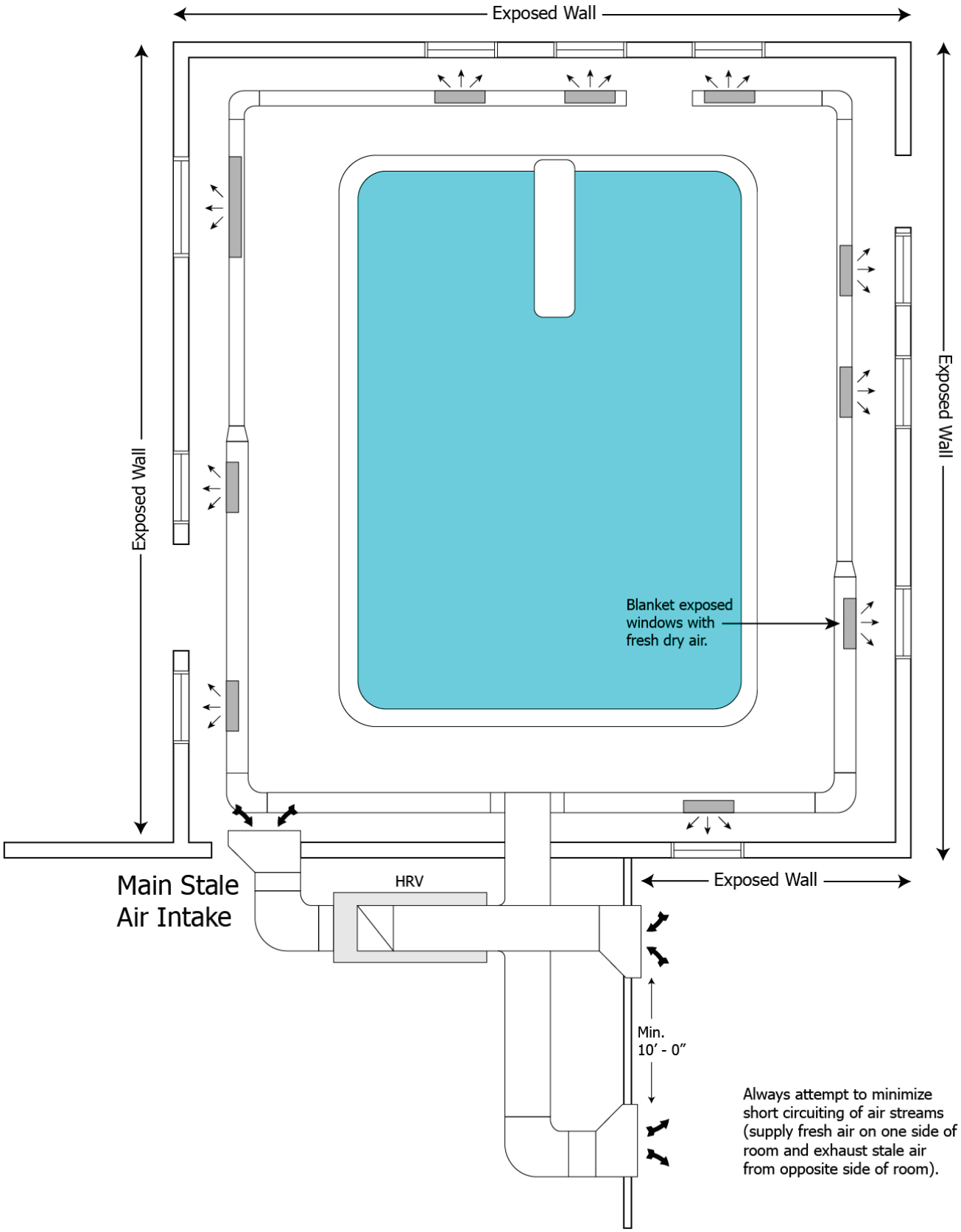

4 SAMPLE DUCT LAYOUT 2

System Installation:
It is necessary to design and size the duct distribution system for both the supply and the exhaust air streams.

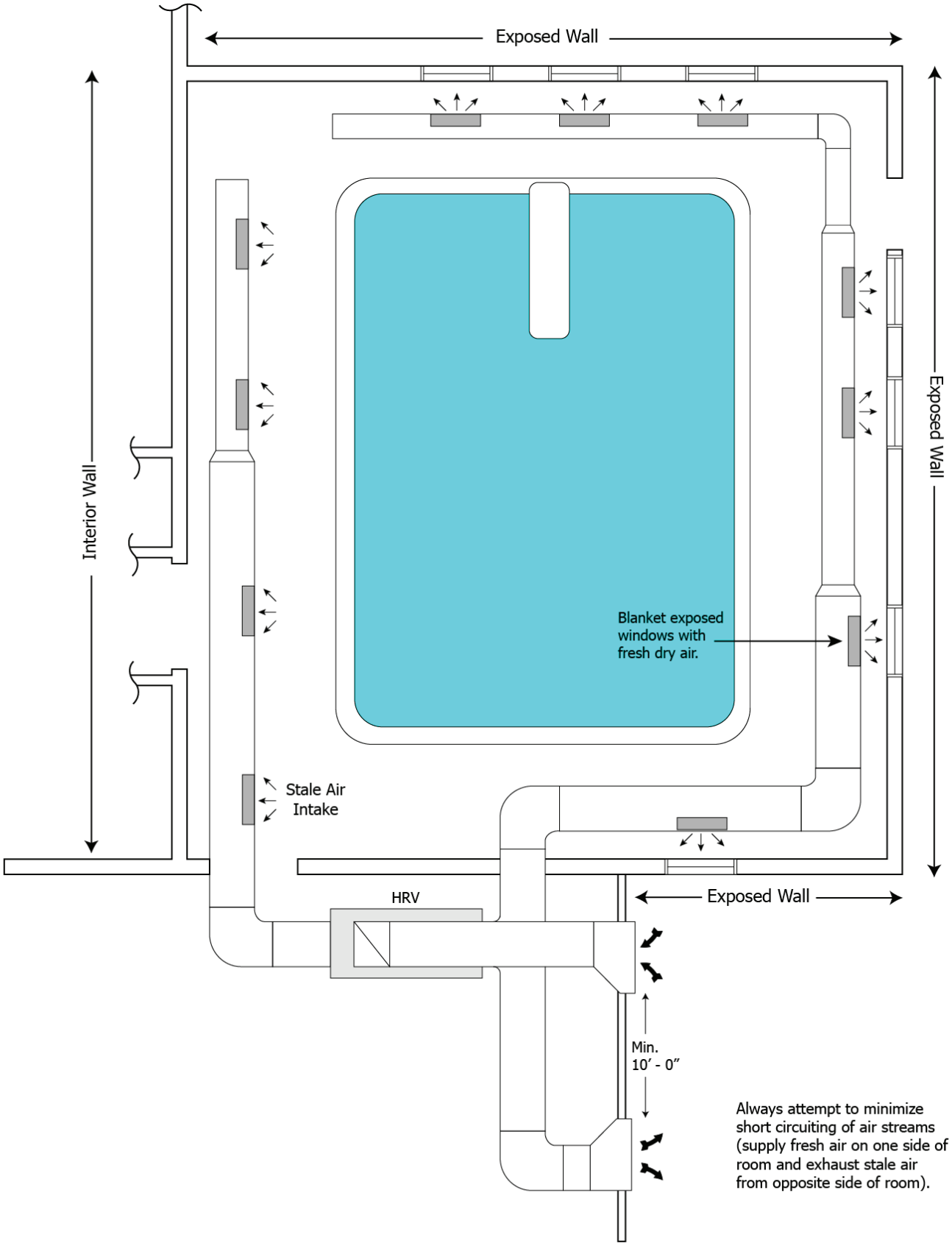

5 DIMENSIONAL DRAWINGS

Airflow:

- Stale Air to Outside
- Fresh Air from Outside
- Stale Air from Inside
- Fresh Air to Inside

AIR 750-P Dimensions:

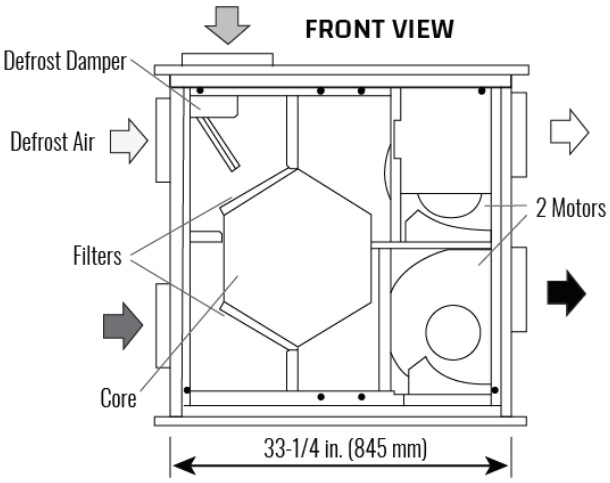

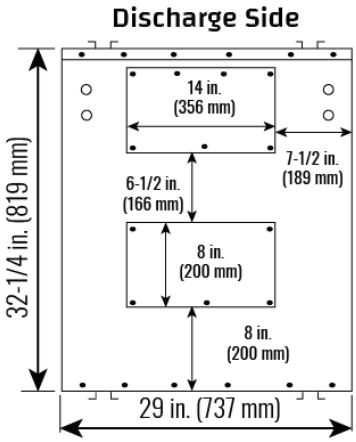

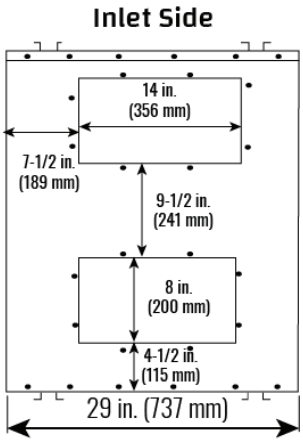

AIR 1250-P Dimensions:

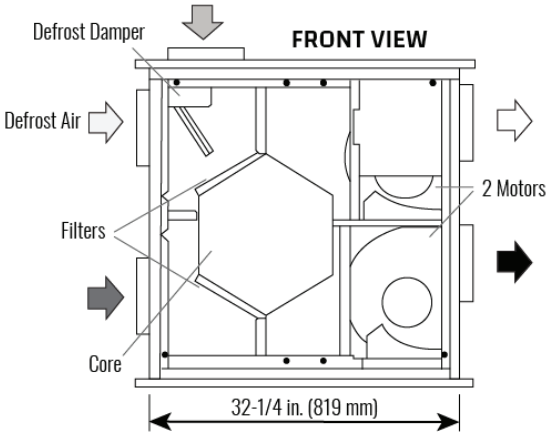

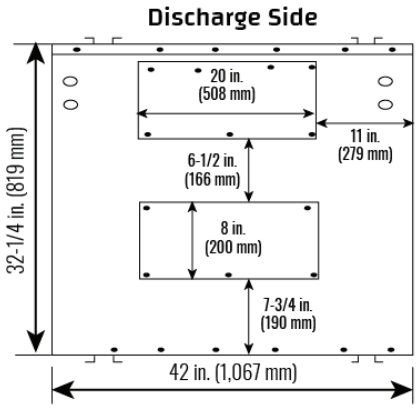

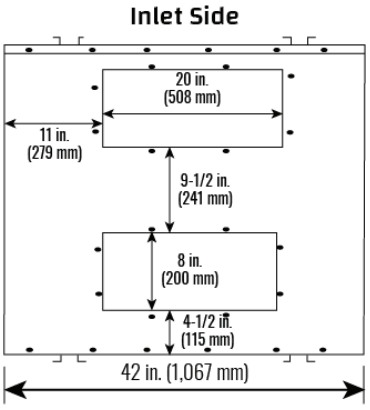

6 STALE AIR RETURN AND FRESH AIR SUPPLY SYSTEM

Stale Air Return System:
Many commercial activities produce air contaminants in the form of dusts, fumes, mists, vapors and gases. Contaminants should be controlled at the source, so they are not dispersed through the building or allowed to increase to toxic concentration levels. The ventilator allows for economical operation of the HVAC system while effectively removing contaminants from the space. In designing the exhaust portion of the system, the exhaust grilles are situated to remove the contaminants while not allowing them to enter the breathing zone of the occupants.

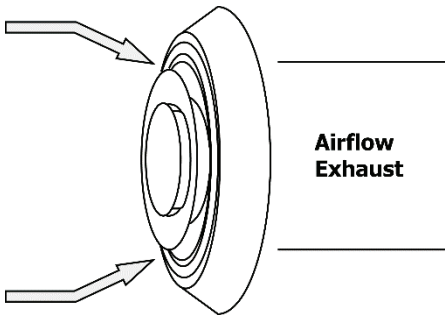

The stale air return system is used to draw air from the points in the building where the worst air quality problems occur. Balancing dampers and/or adjustable grilles are recommended on all return air lines which are used during installation to help balance the "draw" from different areas of the building.

For contaminants lighter than air, grilles should be located high on the wall. If contaminants are heavier than air, a lower placement of the grilles will be required. Information on a contaminants specific gravity and toxicity should be available from chemical data sheets.

Alternately, the stale air may be drawn directly from the return air duct. When this system is used, the air handler's blower must constantly operate. The exhaust take-off connection must be at least 3 ft (1 m) from a directly connected ERV supply duct if both are connected to the same duct run. Note and compensate for the static pressure of the air handlers return system if the static pressure of the return in the air handler exceeds .1 to .15" W.C.

A damper located just prior to the HRV is required to balance the stale air exhausted with the fresh air supply entering the building.

Return air suction points should be located on the opposite side of the room from the fresh air inlet. The inlets may be in the ceiling or high on the walls and fitted with inlet grilles.

Fresh Air Supply System:
The fresh air supply ductwork from the HRV may be directly connected to the furnace return air duct when a dedicated forced air system is present for the pool room. Check the air flow balance of the HRV with the air handler blower both "ON" and "OFF" to determine that it does not imbalance the HRV more than 10%. Also, it is advisable to include a short length of flex duct or other non-metallic connector in this hard ducted line in order to keep the HRV acoustically isolated and separately grounded (electrically) from the air handler. This will avoid a possible shock hazard to service people if a short to ground develops in one of the devices.

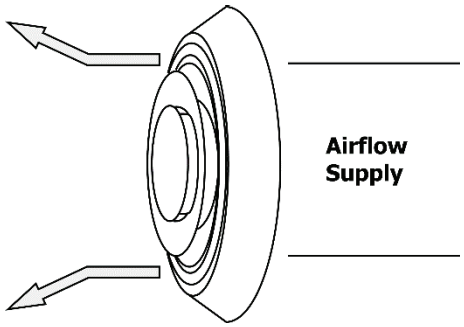

When installing an HRV, the designer and installer should be aware of local codes that may require smoke detectors and/or firestats in the HVAC or HRV ductwork. Because an HRV is designed to bring fresh air into the building, structures may require supply voltage interrupt when smoke or flame sensors are triggered, or when a central fire alarm system is activated.

Supply air grilles may be ceiling or high wall mounted. Avoid locating incoming fresh air grilles that could cause a direct draft on the occupants as the incoming air may be below room temperature. A reheat duct heater can be installed to improve occupant comfort.

7 WEATHERHOODS AND GRILLES

Outside Weatherhoods:
The weatherhoods must have built-in "bird" screen with 1/4 in (6.35 mm) minimum mesh to prevent birds and rodents from entering the ductwork. **Do not** use smaller mesh as it will be very susceptible to plugging up. Gravity dampers at the vents must not be used as they will restrict air flow and often "seize up". The preferred location of the outside weatherhoods is:

- no less than 10 ft. (3 m) apart from each other
- at least 18 in (46 cm) above snow line or ground level
- away from sources of contaminants, such as automobile exhaust fumes, gas meters, garbage cans, containers, etc.
- not exposed to prevailing winds
- The outside perimeter of the weatherhood must be caulked to prevent leakage into the building.
- The design and size of the weatherhoods or louvers chosen by the installer must allow for adequate free area. Water and debris penetration of the system is minimized when the airflow does not exceed 1000 FPM (5.08 m/s) free area velocity.

Ducting from the Weatherhoods:

- Galvanized sheet metal ducting with enough cross section with an integral single piece vapor barrier should be used to connect the ERV to the weatherhoods.
- A minimum R value of insulation should be equal to 4 (RSI 0.75)
- A good bead of high quality caulking (preferably acoustical sealant) and taping with a high quality aluminum foil tape is recommended to seal the duct to both the ERV and the weatherhood.

Adjustable Grilles:
The use of balancing dampers or adjustable grilles as supply air diffusers and air exhaust covers are recommended. TECHGRILLES™ are round, efficient, sound absorbing devices available in 4", 5", 6" and 8" (100, 125, 150, and 200 mm) models.

Part# 99-EAG4 4" diameter Techgrille
Part# 99-EAG5 5" diameter Techgrille
Part# 99-EAG6 6" diameter Techgrille
Part# 99-EAG8 8" diameter Techgrille

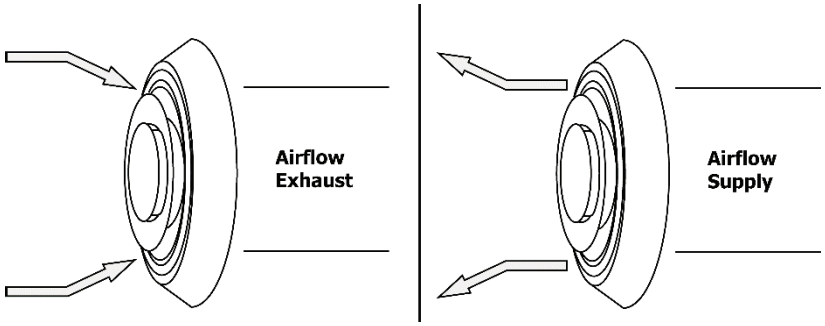

Attention

- All ducting must meet UL Class 1 requirements
- Design and install the fresh air intake in an area where the hoods will gather the freshest air.

8 DRAIN CONNECTIONS

The HRV cabinet has pre-punched holes for the drain. The HRV may produce some condensation during a defrost cycle. This water should flow into a nearby drain or be taken away by a condensate pump.

Figure Callouts:

(1) Drain Spout
(2) Drain Pan
(3) Lock Nut
(4) Tee Connector
(5) Drain Hose
(6) Drain Line
(7) Zip Tie

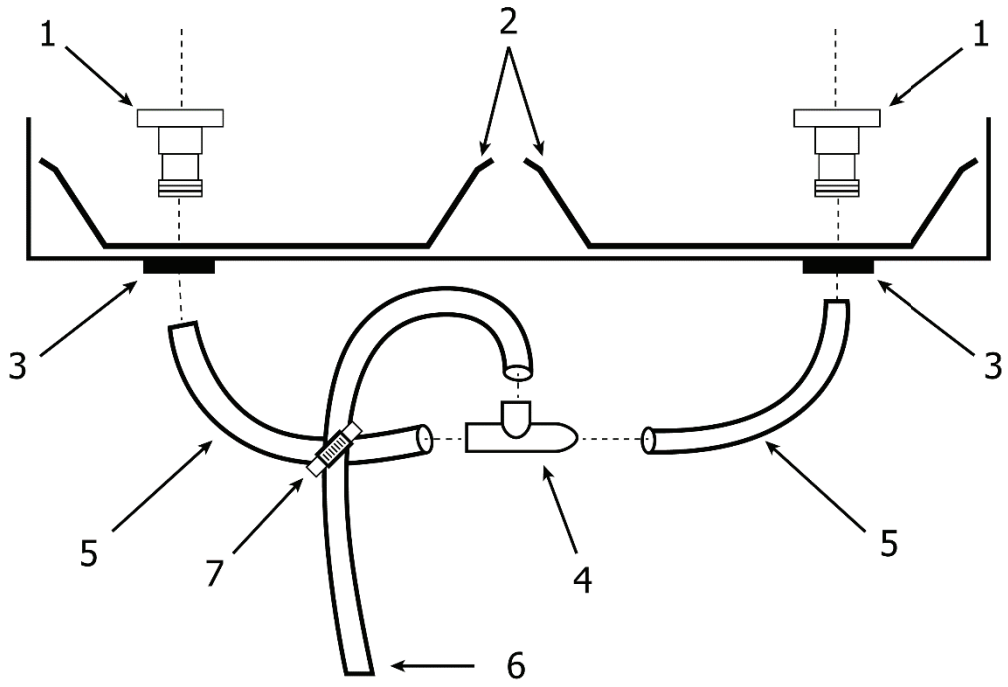

Installation Steps:

1. Install the drain spout through the hole in the drain pan.
2. Hand tighten the lock nut which holds the drain spout in place.
3. Construct a P-trap using the plastic tee connector.
4. Cut two lengths of 1/2 in. drain hose (not included) and connect the other ends to the two drain spouts.
5. Position the tee connector to point upward and connect the drain line. Use a zip tie to secure the drain line to one of the 1/2 in. drain hoses.
6. Tape or fasten base to avoid any kinks.
7. Pour a cup of water into the drain pan of the HRV after the drain connection is complete. This creates a water seal which will prevent odours from being drawn up the hose and into the fresh air supply of the HRV.

⚠ Caution

- The HRV and all condensate lines must be installed in a space where the temperature is maintained above the freezing point.
- Drain trap and tubing must be below bottom of door with 1/4" per foot downwards slope away from unit.
- A secondary drain pan may be required to protect from condensate leakage.

9 ELECTRICAL CONNECTIONS

It is recommended that a licensed electrician make all electrical connections. It is very important that the unit be properly grounded. The circuit must be sized to handle the Full Load Amperage (FLA) indicated on the name tag for the circuit.

Unit	Maximum AMP Rating		
	HIGH	MED.	LOW
AIR 750-P	4.5	-	-
AIR 1250-P	9.4	6.0	4.5

.

⚠ Warning

- Verify the polarity of the power coming into the unit with a test lamp or multimeter. Connect the multimeter or test lamp probe to the wire being tested and the other probe to ground. The black line should be "live". If the white line is "live" the polarity is reversed and must be corrected. If both lines are live, the voltage is not 120VAC. The black open line from the unit should be connected to the live line and the white open line should be connected to the neutral line. Some unit have a safety disconnect rocker switch located just outside of the electrical control box area. The switch disconnects the live line. Verify that it is working properly with a multimeter or test lamp. Always ensure the HRV is properly grounded before and after testing.

⚠ Caution

- The HRV is designed to operate with ducting. When first starting the HRV, measure the amp draw to each motor at each speed to ensure it is operating at or below the max rating.

10 Modes of Operation for the Pool HRV

Ventilation Mode

In ventilation mode, both motors are running, and air is being exchanged with the outside through the supply and exhaust ducts.

VENTILATION MODE

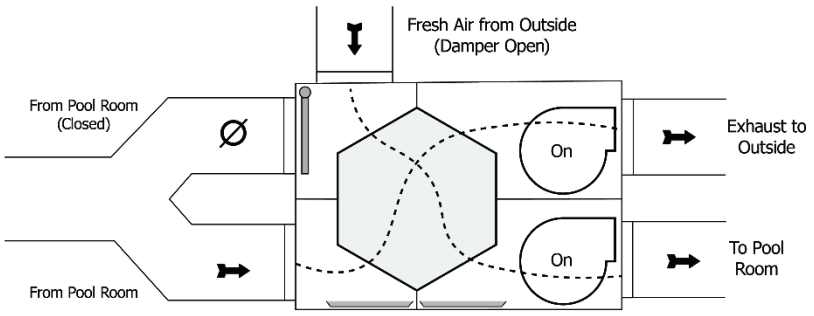

Recirculation Mode

In recirculation mode the supply motor continues to run, and a damper moves to block off air entering from outside, drawing air instead from the conditioned space. The exhaust to outside motor is OFF when in recirculation mode.

RECIRCULATION MODE

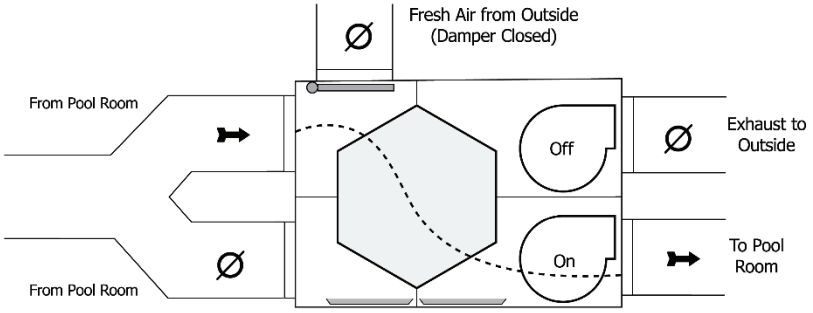

Defrost Mode

All pool HRVs have an electronically controlled damper defrost mechanism. The defrost timer is activated when outside temperatures drop below 27°F (-3°C). A motor driven damper door mechanism opens the "pool and defrost air port" and closes off the "supply air from outside" port. This defrost cycle operates for about 3 minutes and then the damper reverts to its previous "run time" position.

DEFROST MODE

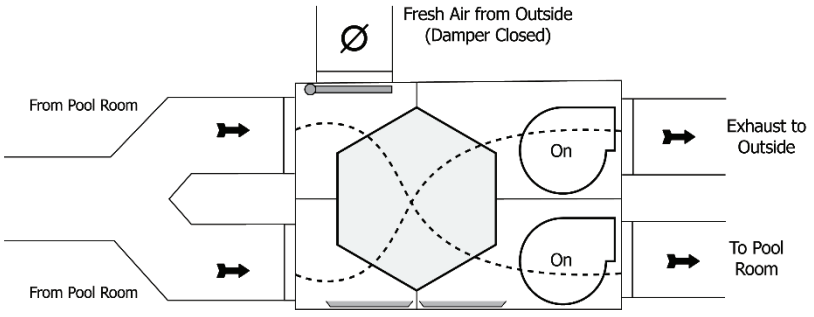

11 Calculating the Ventilation Rate for the Pool Room

Example:

Pool surface area	16’ x 32’ (512 sq ft)
*Indoor design air temperature	83°F
Pool water temperature	81°F
*Relative humidity	50%
*Outdoor design air temperature	15°F

***Always use design temperatures and outdoor air temperatures. Outdoor design temperatures are published by organizations such as ASHRAE. Do not use day to day temperatures for this calculation.**

1. From **Table 1**, select the appropriate evaporation rate based on the room air temperature, water temperature, and relative humidity:

   Evaporation Rate = 0.052

2. From **Table 2**, select the corresponding flow rate factor depending on the indoor air temperature, outdoor temperature, and room relative humidity:

   Flow Rate Factor = 21.70

3. Multiply the values obtained from **Step 1** and **Step 2** to obtain the minimum CFM required per square foot of pool surface area:

   Evaporation Rate x Flow Rate Factor = CFM / square foot of water surface area
   0.052 x 21.70 = 1.12

4. Multiply the value in **Step 3** by the area of the pool:

   Area of Pool x Value for Step 3 = CFM
   512 x 1.12 = 573

⚠ Attention

- Spas/Hot Tubs must be considered when calculating the ventilation rate for a pool room. This ventilation rate is calculated by adding 10 cfm / ft^2 of Spa/Hot Tub surface area. For example, a 25 ft^2 Spa/Hot Tub will add 250 cfm to your pool calculation.

12 TABLE 1 – EVAPORATION RATES

Indoor Air Temp. (°F)	Indoor Relative Humidity (%)								
	40	50	60	40	50	60	40	50	60
	Evaporation Rate lb / (sq. ft-hr.)								
68	0.069	0.063	0.056	0.079	0.073	0.066	0.090	0.084	0.077
70	0.068	0.060	0.053	0.078	0.070	0.063	0.088	0.081	0.074
72	0.065	0.058	0.050	0.075	0.068	0.060	0.086	0.079	0.071
74	0.063	0.055	0.047	0.073	0.065	0.057	0.084	0.076	0.068
76	0.061	0.052	0.043	0.071	0.062	0.053	0.082	0.073	0.064
78	0.059	0.049	0.039	0.069	0.059	0.049	0.080	0.070	0.060
80	0.056	0.046	0.035	0.066	0.056	0.045	0.077	0.067	0.056
82	0.053	0.042	0.031	0.063	0.052	0.041	0.074	0.063	0.052
84	0.050	0.039	0.027	0.060	0.049	0.037	0.071	0.060	0.048
86	0.047	0.065	0.022	0.057	0.045	0.032	0.068	0.056	0.043
88	0.044	0.031	0.017	0.054	0.041	0.027	0.065	0.052	0.038
Water Temp. (°F)	78			81			84		

Indoor Air Temp. (°F)	Indoor Relative Humidity (%)								
	40	50	60	40	50	60	40	50	60
	Evaporation Rate lb / (sq. ft-hr.)								
68	0.102	0.095	0.089	0.115	0.108	0.102	0.129	0.122	0.116
70	0.100	0.093	0.086	0.113	0.106	0.099	0.127	0.120	0.113
72	0.098	0.090	0.083	0.111	0.103	0.096	0.125	0.117	0.110
74	0.096	0.088	0.079	0.109	0.101	0.092	0.123	0.115	0.106
76	0.094	0.085	0.076	0.107	0.098	0.089	0.121	0.112	0.103
78	0.091	0.082	0.072	0.104	0.095	0.085	0.118	0.109	0.099
80	0.089	0.079	0.068	0.102	0.091	0.081	0.116	0.105	0.095
82	0.086	0.075	0.064	0.099	0.088	0.077	0.113	0.102	0.091
84	0.083	0.071	0.060	0.096	0.084	0.073	0.110	0.098	0.087
86	0.080	0.068	0.055	0.093	0.080	0.068	0.107	0.094	0.082
88	0.077	0.063	0.050	0.090	0.076	0.063	0.104	0.090	0.077
Water Temp. (°F)	87			90			93		

13 TABLE 2 – FLOW RATE FACTORS

Outside Air Temp. (°F)	Indoor Relative Humidity (%)								
	40	50	60	40	50	60	40	50	60
	Flow Rate Factor (cfa-hr./lb.)								
-30	39.70	31.50	26.10	35.70	28.30	23.40	32.10	25.50	21.10
-25	40.20	31.80	26.20	36.10	28.50	23.60	32.40	25.70	21.20
-20	40.80	32.10	26.50	36.50	28.80	23.80	32.80	25.90	21.40
-15	41.60	32.60	26.80	37.20	29.20	24.00	33.30	26.20	21.60
-10	42.60	33.20	27.20	38.00	29.70	24.40	34.00	26.60	21.90
-5	43.90	34.10	27.80	39.00	30.40	24.80	34.80	27.10	22.20
0	45.70	35.10	28.50	40.40	31.20	25.40	25.90	27.80	22.70
5	48.10	36.50	29.40	42.30	32.30	26.10	37.40	28.70	23.20
10	51.50	38.40	30.60	44.90	33.80	27.00	39.40	29.80	24.00
15	56.20	41.00	32.20	48.50	35.80	28.30	42.10	31.40	25.00
20	63.40	44.70	34.50	53.70	38.50	30.00	46.00	33.50	26.30
25	74.90	50.10	37.60	61.70	42.50	32.40	51.80	36.40	28.10
30	95.90	58.70	42.30	75.30	48.50	35.80	61.00	40.80	30.60
35	112.78	69.62	46.60	84.08	54.75	38.60	66.18	44.71	32.53
40	129.66	80.53	50.90	92.86	61.00	41.40	71.36	48.63	34.46
45	146.54	91.45	55.20	101.64	67.25	44.20	76.54	52.55	36.40
50	163.42	102.37	59.50	110.42	73.50	47.00	81.72	56.47	38.30
55	180.30	113.28	63.80	119.20	79.75	49.80	86.90	60.38	40.26
60	243.30	124.20	68.10	127.98	86.00	52.60	92.08	64.30	42.20
Indoor Air Temp. (°F)	68			71			74		

Outside Air Temp. (°F)	Indoor Relative Humidity (%)								
	40	50	60	40	50	60	40	50	60
	Flow Rate Factor (cfa-hr./lb.)								
-30	29.00	23.00	19.00	26.10	20.70	17.20	23.60	18.70	15.50
-25	29.20	23.10	19.10	26.30	20.90	17.20	23.80	18.80	15.60
-20	29.50	23.30	19.20	26.60	21.00	17.40	24.00	19.00	15.70
-15	29.90	23.60	19.40	26.90	21.20	17.50	24.20	19.10	15.80
-10	30.40	23.90	19.60	27.30	21.50	17.70	24.60	19.30	15.90
-5	31.10	24.30	19.90	27.90	21.80	17.90	25.00	19.60	16.10
0	32.00	24.80	20.30	28.60	22.20	18.20	25.60	20.00	16.30
5	33.20	25.50	20.70	29.50	22.80	18.60	26.30	20.40	16.60
10	34.70	26.40	21.30	30.70	23.50	19.00	27.30	21.00	17.00
15	36.80	27.60	22.10	32.40	24.50	19.60	28.60	21.70	17.50
20	39.70	29.30	23.10	34.60	25.70	20.40	30.30	22.70	19.10
25	44.00	31.50	24.50	37.80	27.40	21.50	32.70	24.10	19.00
30	50.50	34.70	26.40	42.50	29.80	23.00	36.20	25.90	20.10
35	57.46	37.32	27.77	46.85	31.63	23.99	39.10	27.20	20.83
40	64.43	39.94	29.13	51.20	33.47	24.97	42.00	28.50	21.57
45	71.39	42.56	30.50	55.50	35.30	25.95	44.90	29.80	22.30
50	78.36	45.18	31.87	59.90	37.13	26.93	47.80	31.10	23.03
55	85.33	47.80	33.23	64.25	39.96	27.92	50.70	32.40	23.76
60	92.30	50.40	34.60	68.60	40.80	28.90	53.60	33.70	24.50
Indoor Air Temp. (°F)	77			80			83		

14 Make Up Heat

Make up heat is usually necessary for pool HRVs that are installed as a Fully Dedicated Duct System. An electric in line duct heater or hydronic coil will be necessary to bring the Supply Air to Inside back up to room temperature. Contact your distributor for duct heater sizing and pricing information.

15 Defrost Time Adjustment

Damper Defrost
Damper defrost HRV's have an electronically controlled damper defrost mechanism. If the outside temperature drops below 27°F (-3°C), the defrost timer is activated. A motor driven damper door mechanism opens the defrost port and at the same time closes off the supply air from outside. After the defrost period, the damper operates in the opposite direction to close off the defrost port and reopen the fresh air at the supply port. Defrost cycle repeats until the temperature again rises above 27° F (-3°C).

- If the indoor air temperature is too low, the defrost time may need to be increased.
- The unit must be mounted level (horizontal) to obtain proper drainage of water from the heat exchange cores and drip pans. The warranty will be void if these conditions are not met.

Defrost Time Adjustment
DIP switch #8 (located on the Aircom circuit board) will adjust the defrost time.

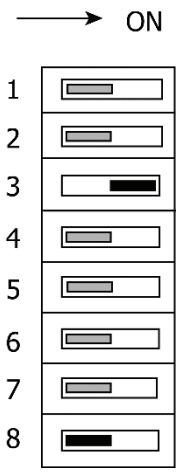

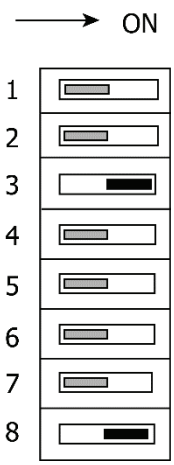

Factory Setting (DIP Switch 8 OFF)
The HRV enters defrost mode when outdoor temperatures drop below 27°F (-3°C). The factory defrost cycle is 4 minutes defrost with a 30 minute run time.

Increased Defrost Time (DIP Switch 8 ON)
Cooler climates may require a more aggressive defrost cycle. Positioning DIP switch 8 to ON will initiate a 4 minute defrost with a 20 minute run time.

⚠ Caution

- Do not change any of the other DIP switch settings.

16 Reversing the Supply and Defrost Air Ports

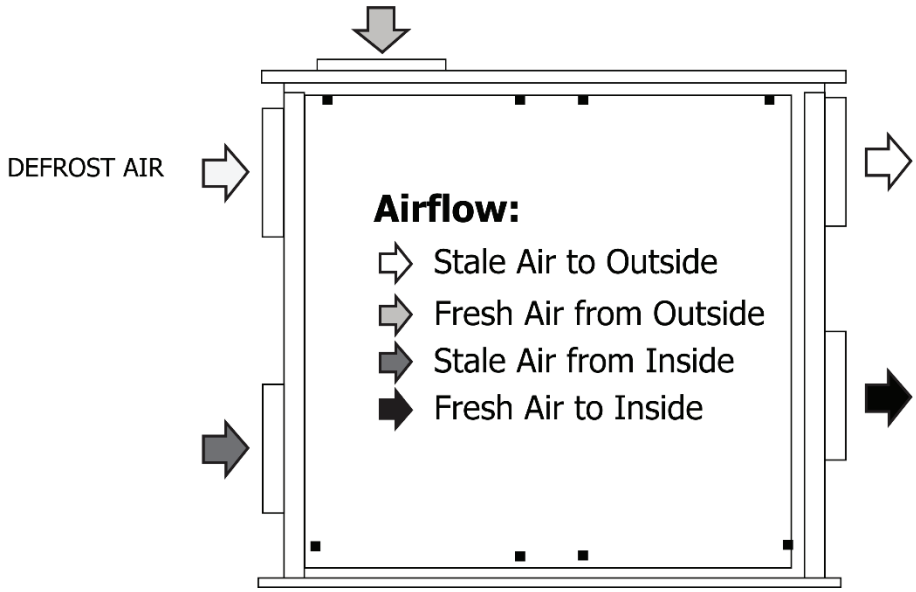

Sometimes installation is easier if the "Fresh Air from Outside" is ducted from the upper left side port (Defrost Air) instead of the top port. Changing the functionality of these two ports is easily accomplished by switching the red and yellow defrost motor wires at the circuit board: switch T37 and T39 on the circuit board.

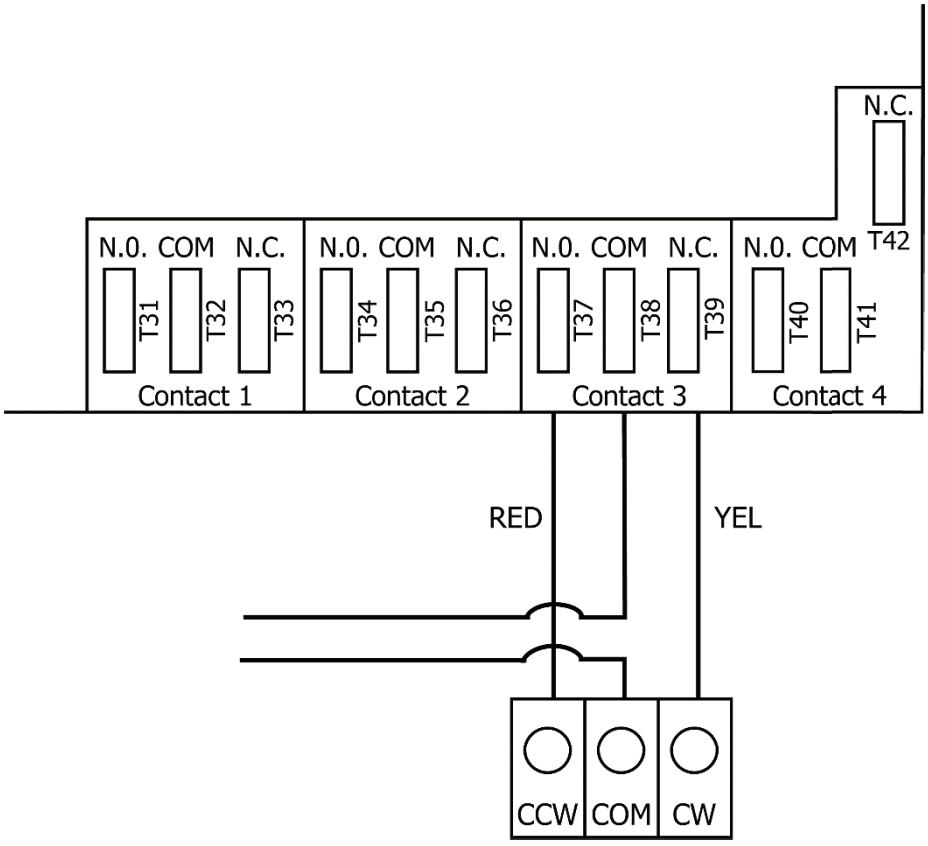

Switch T37 (red wire) and T39 (yellow wire) on the circuit board if you wish to reverse the "Supply Air from Outside" and "Defrost Air" ports. This illustration shows the factory configuration.

17 Function and Controls

Basic Functions
Pool units normally operate in recirculation mode at the selected speed. When the dehumidistat sense moisture above the setpoint, the HRV will switch to ventilate mode and operate at the same speed. Once the dehumidistat is satisfied, the HRV reverts to recirculation mode.

Setup
Speed control is obtained by powering 24V to one of the designated speed taps. Select appropriate operational speed by installing the jumper wire between one of the designated speed taps on the P1 terminals on the Aircom circuit board. A jumper wire is factory installed in the low speed position.

Speed	Jumper Wire Placement	
High	R	W
Medium	R	Y
Low (factory setting)	R	G

Aircom Circuit Board

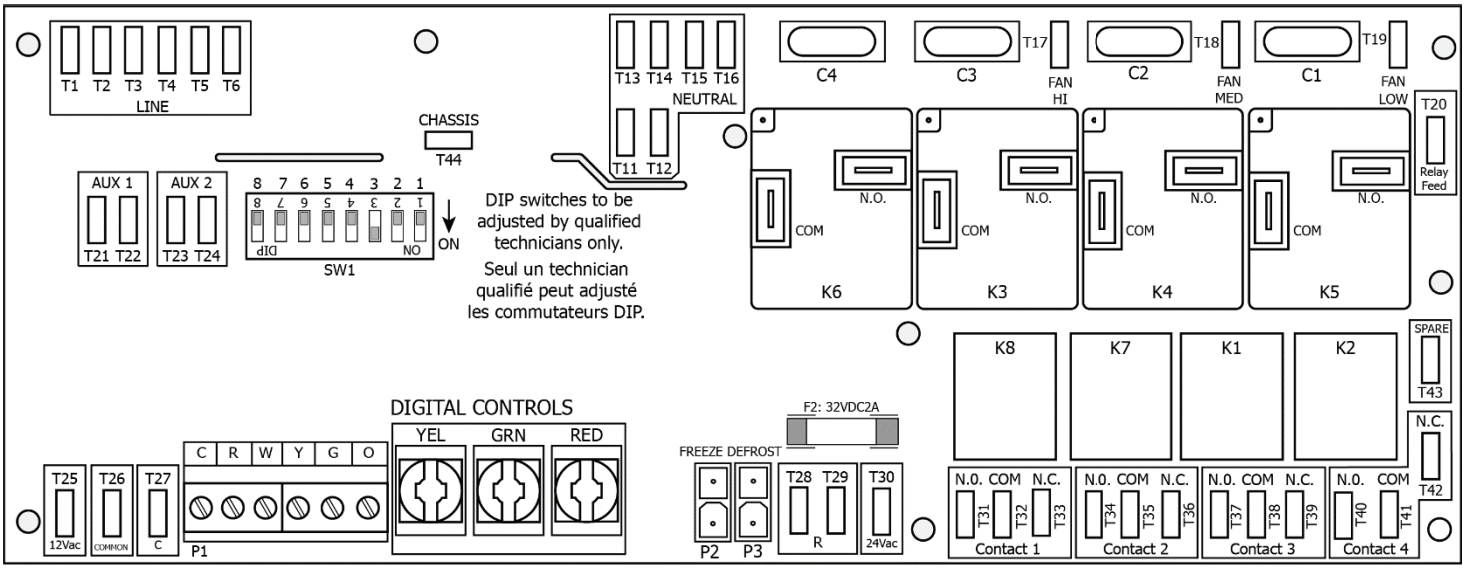

Optional 3 Speed Control (99-500)
See Page 19 for installation on circuit board.

Optional Control and Dehumidistat (99-GBC02)
See Page 20 for installation on circuit board.

18 MAIN WALL CONTROL

3-Speed Control (99-500) Operation:

(1) High Speed Fan
(2) Medium Speed Fan
(3) Low Speed Fan

Press the applicable Fan Speed button to set the fan speed. Press the applicable OFF button in order to turn the Fan Speed control off.

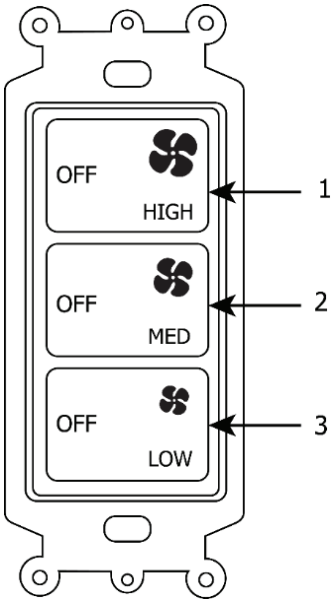

3-Speed Control (99-500) Installation:

Connect the wires from the control to the R, W, Y, and G terminals on the circuit board as shown:

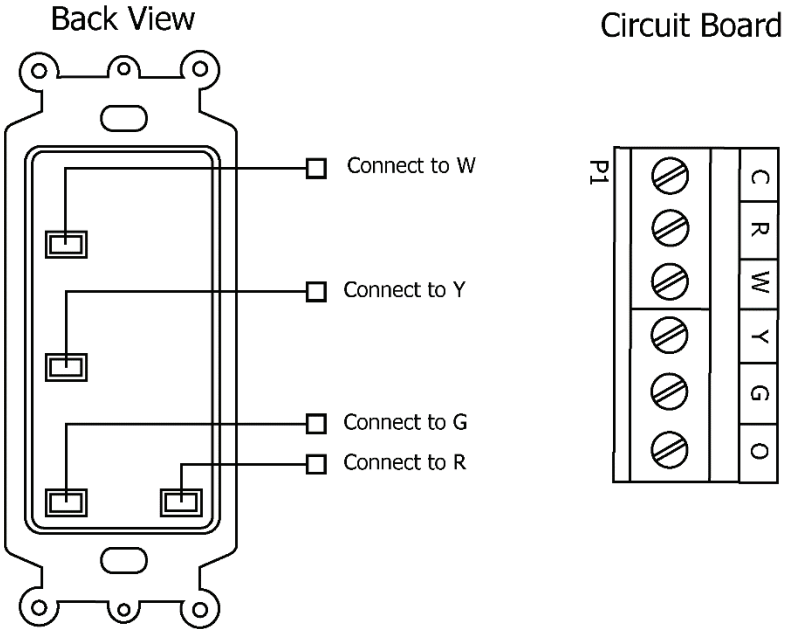

Attention

- Use 4 wires; 20 gauge wire (minimum)
- When used in conjunction with the 99-GBC02, the GBC02 control must be ON for the 99-500 control to operate. The 99-GBC02 will override the 99-500 control when the Dehumidistat is operating, or the control is set to HIGH speed

18 MAIN WALL CONTROL

Ventilation Wall Control (99-GBC02)
Operating Instructions:

(1) ON/OFF Button
(2) Dehumididstat Button
(3) Fan Button
(4) Fan Speed Indicator
(5) Humidity Setting
(6) ON/OFF light

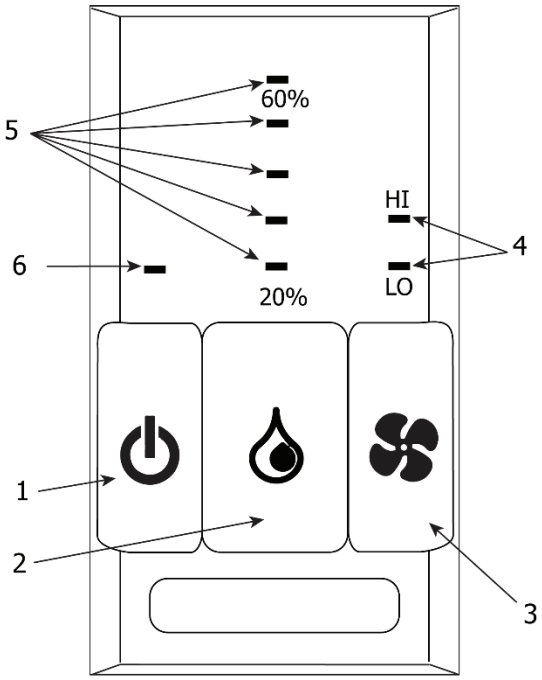

Turning on the Control:
Press the ON/OFF Button ⏻. The ON/OFF light will illuminate.

Setting the Ventilation Speed:
Press the Fan Button to select LOW or HIGH fan speed. The corresponding indicator light will illuminate. If both LO and HI indicator lights are off, the fan is OFF, but will turn ON if required by the Dehumidistat or remote timer (if installed).

Humidity Control:
Your unit will reduce indoor humidity when outdoor humidity levels are lower than indoor humidity levels. This feature is only effective when the outdoor temperature is below 59°F (15°C).

Setting the Dehumidistat:
Pres the Dehumidistat button until the dehumidistat indicator light is at the desired humidity setting. After a few seconds the dehumidistat indicator light will either flash or be on continuously. A flashing light indicates the humidity level is higher than the humidity setting, and the unit is operating on high speed ventilation. A continuous light indicates the humidity level is lower than the humidity setting. The Dehumidistat will override the current speed setting to HIGH speed. The Dehumidistat function can be turned off by pressing the button until the dehumidistat indicator light turns off.

⚠ Attention

- Only one main control can be installed on your system.
- Recirculation is not available on all models.
- Timers will not function when mode of operation is set to "OFF", unless specifically installed for the function. (See Installation Guide for other options.)

19 CONTROL AND DEHUMIDISTAT

The 99-GBC02, 99-GBC03, 99-GBC04 ventilation controls may either be installed onto a flush mounted electrical switch box or surface mounted onto a wall. Only one main control should be installed into a ventilation system.

Installation:

1. Carefully separate the face plate and the back plate by firmly pulling it apart. Keep the top/bottom vent openings clear (figure A).
2. Position the back plate in the desired location on the wall and mark the wall for the desired screw holes (figure B).
3. For mounting the main control without a Decora plate, break off the top and bottom tabs than position the back plate in the desired location on the wall and mark the wall for the desired screw holes (figure C)
4. Remove the back plate from the wall and mark the hole for the wires centered between the two screw holes (figure B or C).
5. Drill two 1/8 in. holes for the screws and wall anchors and drill one 1 in. x 0.75 in. hole for the wires.
6. Pull the 3 wire 20 gauge (min.), 100 ft length (max.), through the opening in the wall.
7. Connect the wires to the R, G, and Y terminals on the back plate (figure B or C).
8. Using the two supplied screws and anchors, install the back plate on the wall.
9. Attach the face plate to the back plate (figure A).
10. Connect the 3 wire 20 gauge (min.), 100 ft length (max.), to the RED, GRN, and YEL terminal on the Digital Controls terminal strip on the Aircom circuit board (figure D).

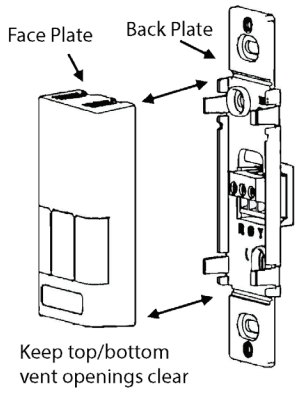

Figure A

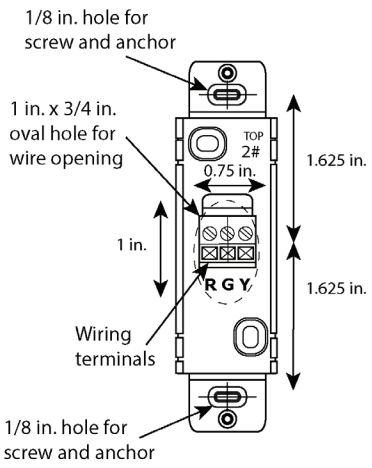

Figure B

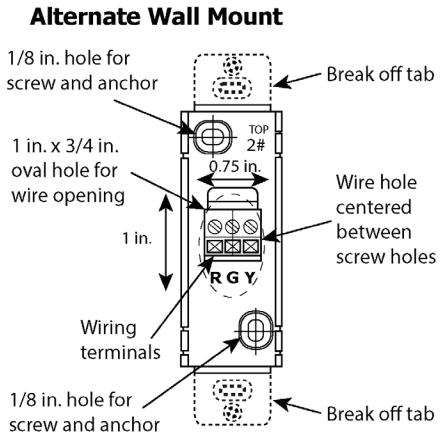

Figure C

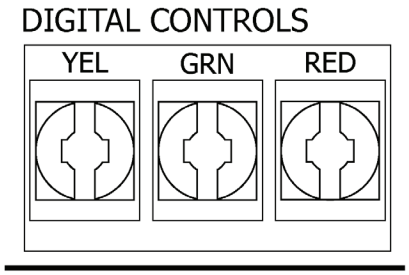

Figure D

⚠ Attention

- Use care when separating or attaching the face plate to avoid damaging the contact pins.

20 BALANCING THE AIRFLOWS

It is necessary to have balanced air flows in an HRV. The volume of air brought in from the outside must equal the volume of air exhausted by the unit. If the air flows are not properly balanced, then;

- The HRV may not operate at its maximum efficiency
- A negative or positive air pressure may occur in the building
- The unit may not defrost properly
- Failure to balance HRV properly may void warranty

Read the Application Warning on the front of this manual!

Prior to balancing, ensure that:

1. All sealing of the ductwork system has been completed.
2. All of the HRV's components are in place and functioning properly.
3. Balancing dampers are fully open.
4. Unit is on HIGH speed.
5. Air flows in branch lines to specific areas of the house should be adjusted first prior to balancing the unit. A smoke pencil used at the grilles is a good indicator of each branch line's relative air flow.
6. After taking readings of both the stale air to the HRV duct and fresh air to the house duct, the duct with the lower CFM ([L/s] velocity) reading should be left alone, while the duct with the higher reading should be adjusted back to match the lower reading.
7. Return unit to appropriate fan speed for normal operation

Balancing Procedure
The following is a method of field balancing an HRV using a Pitot tube, advantageous in situations when flow stations are not installed in the ductwork. Procedure should be performed with the HRV on high speed.

1. The first step is to operate **all** mechanical systems on high speed, which have an influence on the ventilation system, i.e., the HRV itself and the forced air furnace or air handler if applicable. This will provide the maximum pressure that the HRV will need to overcome and allow for a more accurate balance of the unit.
2. Drill a small hole in the duct (about 3/16"), three feet downstream of any elbows or bends, and one foot upstream of any elbows or bends. These are recommended distances, but the actual installation may limit the amount of straight duct.
3. The Pitot tube should be connected to a manometer capable of reading 3 digits of resolution. The tube coming out of the top of the pitot is connected to the high pressure side of the gauge. The tube coming out of the side of the pitot is connected to the low pressure or reference side of the gauge. Insert the Pitot tube into the duct, pointing the tip into the airflow.
4. For general balancing it is enough to move the pitot tube around in the duct and take an average or typical reading.
5. Repeat this procedure in the other (supply or return) duct.
6. Determine which duct has the highest airflow (highest reading on the manometer).
7. Adjust the higher airflow by adjusting the field supplied damper. The flows should now be balanced. Actual airflow can be determined from the gauge reading. The value read on the gauge is called the velocity pressure. The Pitot tube comes with a chart that will give the air flow velocity based on the velocity pressure indicated by the gauge. This velocity will be in either feet per minute or meters per second. To determine the actual airflow, the velocity is multiplied by the cross-sectional area of the duct being measured.

⚠ Attention

- Continuous, excessive, positive pressure may drive moist indoor air into the external walls of the building. Once inside the external walls, moist air may condense (in cold weather) and degrade structural components or cause locks to freeze.
- Continuous, excessive, negative pressure may have several undesirable effects. In some geographic locations, soil gases such as methane and radon gas may be drawn into the home through basement or ground contact areas and may also cause the backdrafiting of vented combustion equipment.

20 BALANCING THE AIRFLOWS

Example:
This is an example for determining the airflow in a 6 in. (0.5 ft) duct.

- The Pitot tube reading was 0.025 inches of water. From the chart, this is 640 ft/min.

The 6 in. (0.5 ft) duct has a cross sectional area of:

$A = \pi r^2 = [\pi d^2] / 4$
$A = [3.14 \times (0.5 \text{ ft})^2] / 4$
$A = 0.2 \text{ ft}^2$

The airflow is then: (640 ft./min.) x (0.2 ft^2) = 128 cfm

For your convenience, the cross-sectional areas of some common duct sizes are listed below:

DUCT. DIAM. (inches)	**CROSS SECTION AREA** (sq. ft.)
5 (127 mm)	0.14
6 (152 mm)	0.20
7 (178 mm)	0.27

The accuracy of the air flow reading will be affected by how close to any elbows or bends the readings are taken. Accuracy can be increased by taking an average of multiple readings as outlined in the literature supplied with the Pitot tube.

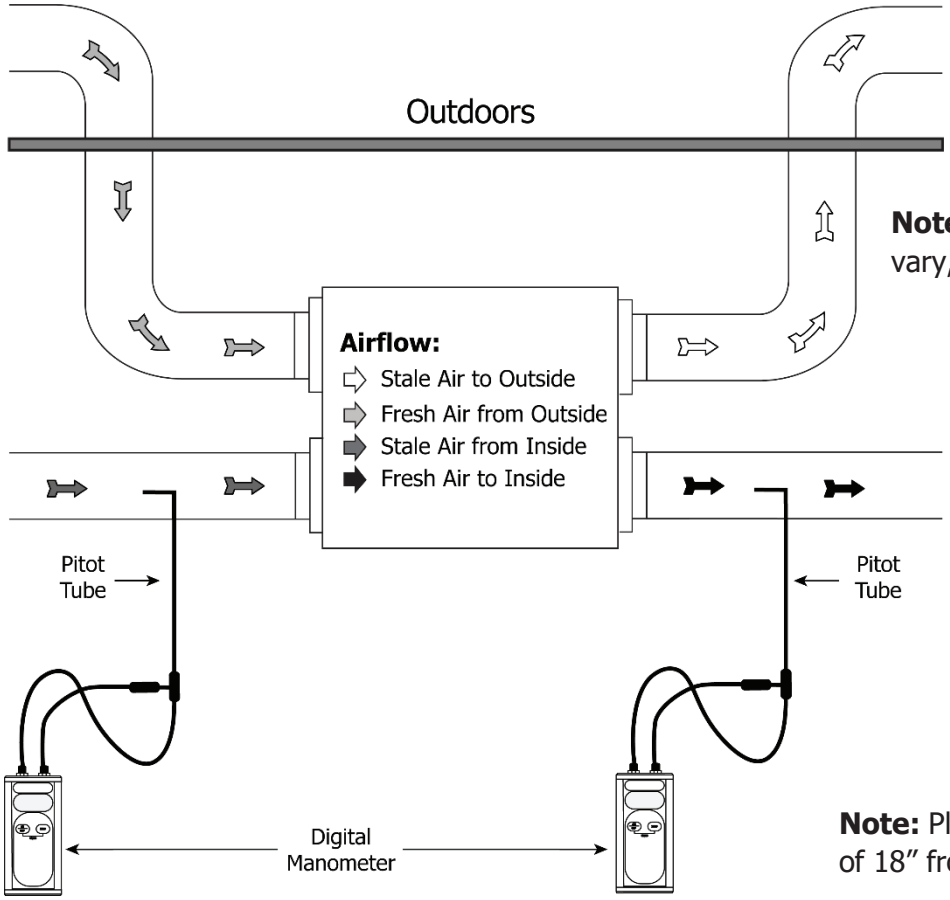

Note: Duct connections may vary, depending on model.

Note: Place pitot tube a minimum of 18" from blower or elbows

21 SERVICE AND MAINTENANCE

Servicing your HRV on a regular schedule will result in optimum operating efficiencies and prolonged life of the equipment. Due to numerous applications in which this equipment can be installed, it is difficult to predict servicing intervals. In certain situations where there is heavy smoke, servicing the equipment every one to two months may be needed; whereas ventilating a meeting room for carbon dioxide may only need service every six months to a year.

Motor
Access to the motor is through the front service doors. Note heat exchanger core can be removed to provide more room. See **HRV Core** in this section. The motor is a permanent split capacitor type (PSC) which uses a sleeve mechanism to steady the shaft.

HRV Core
The heat exchange core is accessible through the front service door. Special care and attention should be given to this component as the edges may be sharp, and the core itself susceptible to damage if dropped.

When removing the core, the location it is removed from should be noted. The core is removed by carefully pulling the core outward from the unit, sliding it evenly along its guide rail supports found on the top and bottom corners, and on either side of the core. Note the core may have some resistance when sliding out. Avoid tilting the core as this will result in its edges catching the guide rail and temporarily preventing its removal. In most cases, washing the core in a mild detergent and warm water will be all that is needed to completely clean them. Do not use harsh chemicals as this may cause corrosion in the HRV. The time between core service will depend on the application the HRV has been installed in. It can be as often as one - two months or at the very least, cleaned every six months. When reinstalling the core, you must note foam location and drip edge location for proper core placement. See diagram below.

With the core in its proper position, place the bottom corner into its guide rail support, then place the left side, the right side, and finally the top corner, into place in the same fashion. Once the core is in place, push the core evenly into the cabinet until it reaches the back.

Note the core will protrude slightly from the front of the cabinet; this is so the access door, when closed, ensures a tight fit.

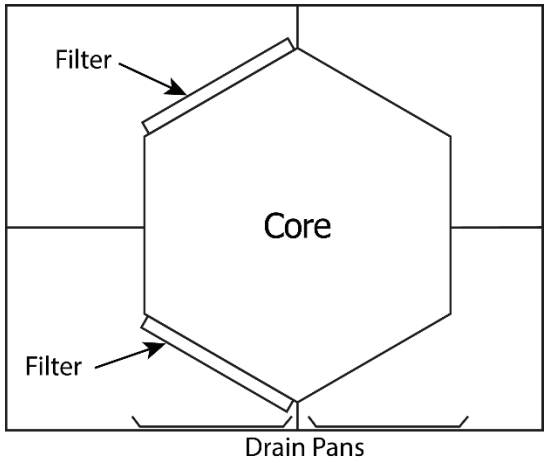

Note: When removing cores and filters, note their location and arrangement.

21 SERVICE AND MAINTENANCE

Filters
Open front service door to access the filters located in both supply and exhaust air streams. It may be easier to first remove the core before removing the filters

- The filters are designed to stop large particles from entering in the core.
- The filters are fastened in place by a metal spring rod.
- To remove filters from core(s) simply pull the rod from one end, outward until free from core lip, and remove.
- Only use cold water with a mild detergent to wash the filters. Do not use harsh chemicals.
- The time between filter service will depend on the application the HRV has been installed in. It can be as often as one - two months or at the very least, cleaned every six months.

Condensate Drains
The condensate drains consist of two drain pans which may collect water after the HRV initiates a defrost cycle, and a drain line to remove the condensate. Maintenance on this portion of the system should be done as often as possible and should not exceed six months. Note bacterial growth in standing water is a major concern to healthy indoor air quality and should be avoided whenever possible. To clean these components, open the front service door and flush the pans with water. Ensure that the pans drain completely and in a reasonable amount of time. Note if the water does not drain right away, check for blockage in the drain line, also check that the drain line has a good slope to it. (1/8 - 1/4" per foot) The drain line itself should have a "P" trap in it below the HRV which is to be filled with water to prevent odors or gases from entering back into the unit.

Duct Work
It is a good idea to inspect ducting, outside weather hoods (wall caps), and grilles for blockage and dirt buildup, at least every six months. Outside weatherhoods should be protected by a bird screen which can plug up with debris. Also, it is a good idea to visually confirm that the fresh air supply is free from any sources of contamination, such as other vented combustion equipment added after the fact.

Damper Motor
The damper motor, (if applicable) is a self-contained motor and does not require service. The damper door attached to the motor could use a little lithium grease on the shaft opposite the motor, where it enters its holder, once every two - three years.

General Maintenance
As a final step in a routine maintenance schedule, it is a good idea to confirm operation of the system, checking speed control functions and remote control operation, if applicable. Wipe the inside of the cabinet to remove dust and cobwebs as needed. It is a good idea to keep a service/maintenance log of the unit.

22 REVERSE INSTALLATION OF THE HRV

Electrical Box Removal:
Remove the door panels from the HRV by loosening the screws located on the face of the doors.

1. Remove the electrical box cover by removing the 4 screws fastening the cover in place.
2. Disconnect the motor wires coming through the bottom of the electrical box from the circuit board, capacitors and relays, and remove from the electrical box.
3. Pull motor wires for lower blower through hole in blower divider panel.
4. Disconnect damper motor wires (three) from the circuit board and remove from the electrical box.
5. Disconnect thermistor from circuit board and remove from electrical box.
6. Remove the 4 screws securing the electrical box to the cabinet of the HRV.

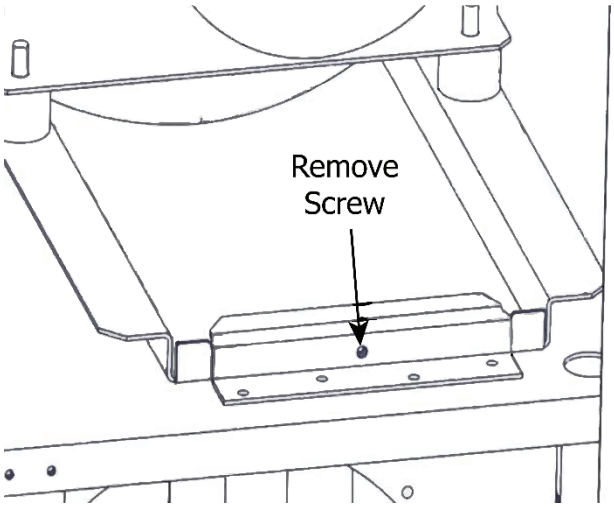

7. Remove the ground continuity screw from both the upper and lower blower pans securing them to the pan stops.

Damper Removal:

1. Cut cable tie fastening thermistor wire to bracket, disconnect thermistor from circuit, and remove thermistor.
2. On the damper motor, loosen the two set screws which hold the square damper rod in place using a 1/8” hex key.
3. Remove the machine screw and keps nut fastening the damper motor to the bracket.
4. Remove the damper motor from the bracket and ensure that the two shims are collected from either side of the damper rod, and by pulling the damper motor wires out from the top core support panel.
5. Remove the plastic snap bushing from the hole in the top core support panel where the damper wires were removed from, and install a snap plug to seal the hole, found in the manual bag.

Reinstalling the Damper Motor:

1. On the opposite side of the HRV, place the damper motor over the square damper rod aligning the end of the rod flush with the damper motor.
2. Install the machine screw and keps nut which fastens the damper motor to the bracket.
3. Insert the shim around the damper rod ensuring it is placed on the opposite side of the rod from the set screws. Both set screws should screw directly into the damper rod, not the shim.
4. Prior to tightening the set screws ensure proper alignment of the damper door such that it is evenly spaced over the port collars providing a good seal in both directions.
5. Once alignment is confirmed, tighten the set screws to secure the damper into place.
6. Remove the snap plug from the hole in the top core support panel and install a plastic snap bushing in hole.
7. Route damper motor wires through hole in top core support panel.

22 REVERSE INSTALLATION OF THE HRV

Reinstalling the Electrical Box:

1. Remove the two snap plugs from the opposite side of the cabinet for electrical and control wires.
2. Install the two snap plugs in the cabinet holes on the side of the HRV which electrical box was originally removed from.
3. Route wires for both blower motors to opposite side of HRV cabinet where electrical box is to be installed.
4. Install the grounding continuity screw in both the upper and lower blower assemblies on the opposite side of the HRV where electrical box is now installed.
5. Fasten the electrical box to the cabinet of the HRV using the 4 screws that were previously removed.
6. Remove the snap plug from the blower divider panel and install plastic snap bushing provided in manual bag.
7. Install snap plug in hole in blower divider panel where lower blower motor wires were originally removed from.
8. Route the lower blower motor wires through the hole in the divider panel into the electrical box.
9. Route upper motor wires into the electrical box.
10. Route damper motor wires into e-box and connect the motor wires to the circuit board, relays and capacitors using wiring diagram found in manual for reverse installations.
11. Connect damper motor wires to circuit board using wiring diagram found in manual for reverse installations.
12. Route thermistor wire from electrical box, through hole in the top core support panel, and secure the blue end to the thermistor bracket in front of the damper motor using a plastic cable tie.
13. Connect the thermistor to the circuit board in the electrical box.
14. Putty holes closed in blower divider panel and top core support panel with wires protruding through.
15. Install the large single door panel on the now back of the cabinet where electrical box was removed from and fasten using the eight machine screws.
16. Reversing of the HRV is now complete. Continue with the installation of the HRV.

23 TROUBLESHOOTING

Refer to the following table for troubleshooting the HRV unit.

Table 17.1 – Troubleshooting Procedures

SYMPTOM	CAUSE	SOLUTION
Poor airflows	• 1/4 in. (6mm) mesh on outside hood is plugged • Filters plugged • Core obstructed • House grilles closed or blocked • Dampers are closed if installed • Poor power supply at site • Ductwork is restricting HRV • Improper speed control setting • HRV airflow improperly balanced	• Clean exterior hoods or vents • Remove and clean filter • Remove and clean core • Check and open grilles • Open and adjust dampers • Have electrician check supply voltage • Check duct installation • Increase the speed of the HRV • Have contractor balance HRV
Supply air feels cold	• Poor location of supply grilles, the airflow may irritate the occupant • Outdoor temperature extremely cold	• Locate the grilles high on the walls or under the baseboards, install ceiling mounted diffuse or grilles so as not to directly spill the supply air on the occupant (i.e. over a sofa) • Turn down the HRV supply speed. A small duct heater (1 kW) could be used to temper the supply air • Placement of furniture or closed doors is restricting the movement of air in the home • If supply air is ducted into furnace return, the furnace fan may need to run continuously to distribute ventilation air comfortably
Dehumidistat is not operating	• Outdoor temperature is above 15°C (59°F) • Improper low voltage connection • External low voltage is shortened out by a staple or nail • Check dehumidistat setting it may be on OFF	• Dehumidistat is functioning normally (see Auto Dehumidistat Disable in this manual) • Check that the correct terminals have been used • Check external wiring for a short • Set the Dehumidistat at the desired setting

23 TROUBLESHOOTING

Refer to the following table for troubleshooting the HRV unit.

Table 17.1 – Troubleshooting Procedures (cont.)

SYMPTOM	CAUSE	SOLUTION
Humidity levels are too high condensation is appearing on the windows	• Dehumidistat is set too high • HRV is not sized to handle a hot tub, indoor pool etc. • Lifestyle of the occupants Moisture coming into the home from an unvented or unheated crawl space • Moisture is remaining in the washroom and kitchen areas • Condensation seems to form in the spring and fall HRV is set at too low a speed	• Set Dehumidistat lower • Cover pools, hot tubs when they are not in use • Avoid hanging clothes to dry, storing wood and venting clothes dryer inside. Firewood may have to be moved outside • Vent crawl space and place a vapor barrier on the floor of the crawl space • Ducts from the washroom should be sized to remove moist air as effectively as possible, use of a bathroom fan for short periods will remove additional moisture • On humid days, as the seasons change, some condensation may appear, but the homes air quality will remain high with some HRV use Increase speed of the HRV
Humidity levels are too low	• Blower speed of HRV is too high • Lifestyle of occupants • HRV airflows may be improperly balanced	• Decrease HRV blower speed • Humidity may have to be added using humidifiers • Have contractor balance HRV airflows
HRV and/or ducts frosting up	• HRV airflows are improperly balanced • Malfunction of the HRV defrost system	• Note: minimal frost build-up is expected on cores before unit initiates defrost cycle functions • Have HVAC contractor balance the HRV • Ensure damper defrost is operating during self-test
Condensation or ice buildup in insulated duct to the outside	• Incomplete vapor barrier around insulated duct • A hole or tear in outer duct covering	• Tape and seal all joints • Tape any holes or tears made in the outer duct covering, ensure that the vapor barrier is completely sealed
Excess water in the bottom of the HRV	• Drain pans plugged • Improper connection of HRV's drain lines • HRV is not level • Drain lines are obstructed • HRV heat exchange core is not properly installed	• Look for obstructions in the drain line • Look for kinks in the drain line
Excessive vibration	• Dirt on fan wheels	• Have contractor service HRV

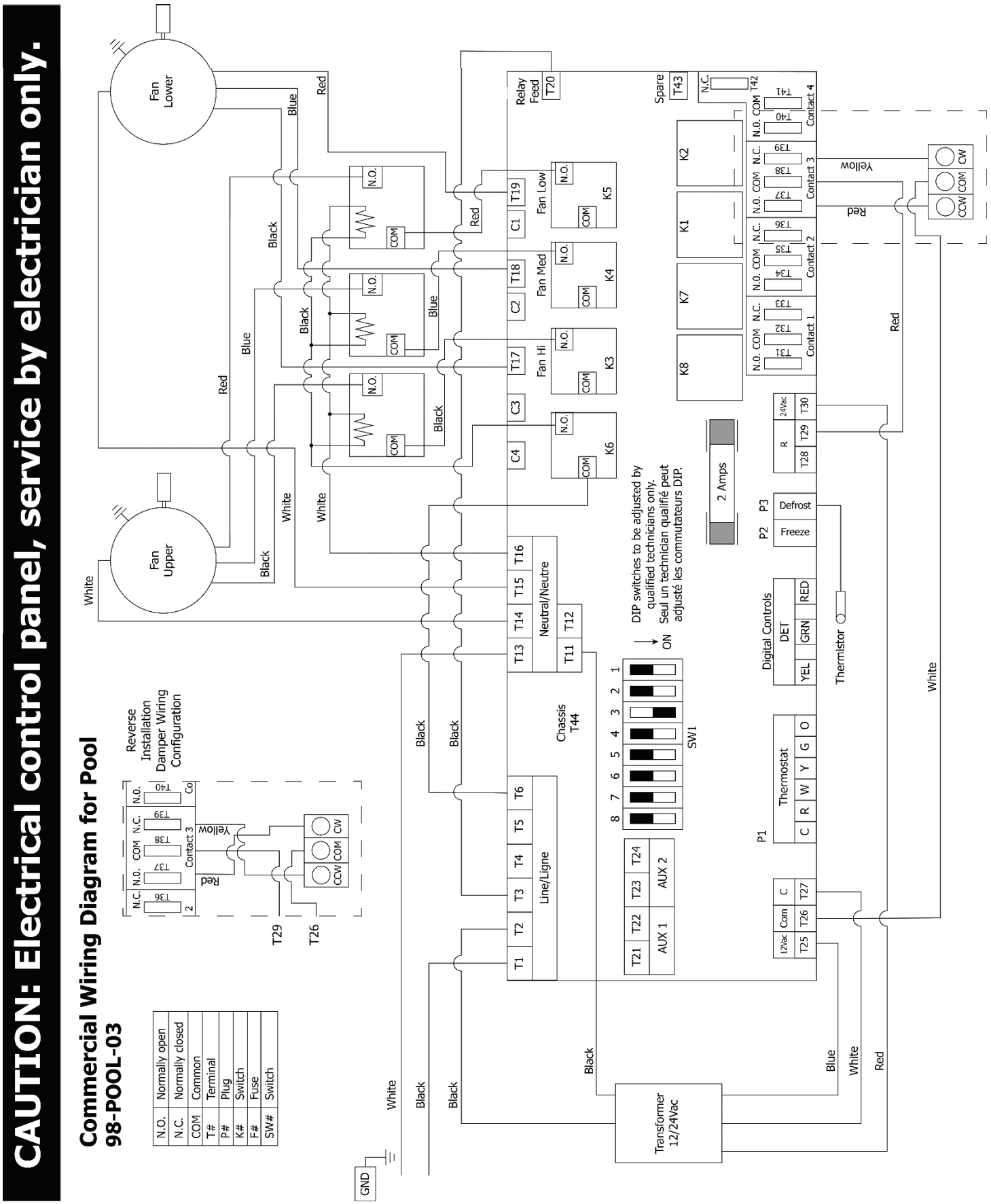
CAUTION: Electrical control panel, service by electrician only.
Commercial Wiring Diagram for Pool
98-POOL-03
Reverse Installation Damper Wiring Configuration
N.O. Normally open
N.C. Normally closed
COM Common
T# Terminal
P# Plug
K# Switch
F# Fuse
SW# Switch
Fan Lower
Fan Upper
Red
Blue
Black
White
Yellow
GND
Transformer 12/24Vac
Chassis T44
Line/Ligne
Neutral/Neutre
Relay Feed T20
Spare T43
Fan Low
Fan Med
Fan Hi
K1
K2
K3
K4
K5
K6
K7
K8
Contact 1
Contact 2
Contact 3
Contact 4
2 Amps
DIP switches to be adjusted by qualified technicians only.
Seul un technician qualifié peut adjusté les commutateurs DIP.
SW1
ON
Thermostat
C R W Y G O
Digital Controls
DET
YEL GRN RED
Thermistor
Defrost
Freeze
P1 P2 P3
AUX 1
AUX 2
12Vac Com C
24Vac
CCW COM CW
T29
T26

25 WARRANTY

AIRIA BRANDS INC.® (AIRIA) warrants to the original purchaser of the AIRFLOW® model and accessories referred to below, to be free from manufacturing defects.

This Limited Warranty is personal to AIRIA® and is in effect from the installation date, but no later than 12 months after the date the product was manufactured (if the installation date cannot be verified, the warranty period will begin on the date of manufacture). The serial number can be used to determine the date of manufacture: XX XX MMDDYY ###; or MMDDYY ###. The warranty is dependent on the type of unit:

Type of Unit	Warranty
HRV Residential	Lifetime on the Core / 5 years on other components
HRV Commercial	15 years on the Core / 2 years on other components
ERV Residential	5 years on the Core / 5 years on other components
ERV Commercial	5 years on the Core / 2 years on other components
Accessories (e.g. controls and timers)	1 year
Replacement Parts (e.g. motor)	1 year
Clean Air Furnace (HRV)	Lifetime on the Core / 2 years on other components
Clean Air Furnace (ERV)	5 years on the Core / 2 years on other components
Air Handler	5 years
TFP	5 years

Damage resulting from all other causes, including but not limited to: lightning, hurricane, tornado, earthquake or any other acts of God; improper installation, modification, alteration or misuse of the AIRFLOW® unit or its operation in a manner contrary to the instructions accompanying the unit at the time of sale; accidental or intentional damage, neglect, improper care, or other failure by the owner to provide reasonable and necessary maintenance of the product; any attempt at repair by an unauthorized service representative or not in accordance with this warranty; or any other causes beyond the control of AIRIA®, are excluded from this warranty.

If you feel that the AIRFLOW® unit you purchased is not free from manufacturing defects, please refer to https://www.lifebreath.com/homeowners-2/find-a-contractor/ to find the name of your nearest dealer in order to repair the product. The labour required to install any replacement part(s) is not covered by AIRIA®.

AIRIA® reserves the right to replace the entire unit or to refund the original purchase price in lieu of repair.

AIRIA® MAKES NO EXPRESS WARRANTIES, EXCEPT FOR THOSE SET FORTH HERIN AND SHALL NOT BE LIABLE FOR ANY INCIDENTAL, SPECIAL OR CONSEQUENTIAL DAMAGES WITH RESPECT TO AIRFLOW® COVERED BY THIS WARRANTY. AIRIA'S COMPLETE LIABILITY AND THE OWNER'S EXCLUSIVE REMEDY BEING LIMITED TO REPAIR OR REPLACEMENT ON THE TERMS STATED HEREIN. ANY IMPLIED WARRANTIES, INCLUDING BUT NOT LIMITED TO THE IMPLIED WARRANTY OF MERCHANTABILITY AND OF FITNESS FOR ANY PARTICULAR PURPOSE, ARE EXPRESSLY EXCLUDED.

NO PERSON IS AUTHORIZED TO CHANGE THE WARRANTY IN ANY WAY OR GRANT ANY OTHER WARRANTY UNLESS SUCH CHANGES ARE MADE IN WRITING AND SIGNED BY AN OFFICER OF AIRIA®.

MODEL NO.: _____

UNIT SERIAL NO.: _____

INSTALLED BY: _____

DATE: _____